Guidelines for Obtaining a LIRR Entry Permit

Step 1: **Is this an LIRR Project:**

If no, Proceed to Step 2
If Yes, Contact LIRR Project Manager

Step 2: **Request for Entry Permit:**

Contact:
Mr. Tom Shen, PE
Managing Engineer – Civil Inspections
Long Island Railroad, Hillside Maintenance Complex
93-59 183rd Street, Dept. 3146
Hollis, NY 11423

Tele: (718) 558-4889
Email: ccshen@lirr.org

Provide:

1) **On Company letterhead**; Company Name, Address, **Principal of Company (President or VP)**, Contact Person's Name, Title, & Telephone #'s, email address,
2) Authority for whom the work is being performed (NYC or NYS DOT, County, Utility Company, etc.), if applicable,
3) Contract Number assigned by the above Authority, for the work to be performed,
4) Full Description of work (detailed scope of work), and location of where the work will be performed (street address, cross streets, town, county, etc)
5) Additional information that may clarify the working limits and any interference to LIRR operation (i.e. drawings, surveys, crane calculations, etc.)
6) Amount of time necessary to complete the work and anticipated time that work will be on or adjacent to LIRR ROW.

After reviewing the Entry Permit request / submittal package for completeness, a copy of the LIRR Entry Permit will be prepared, an estimate will be generated for the anticipated service, scanned and forwarded to the requestor for signature. **Upon receipt, the requester must review, sign, scan, and return the permit and all required insurance documents, to the Managing Engineer – Civil Inspections.**

Step 3: **Initial Insurance Review:**

Upon receipt, review, and approval of all insurance documents by the MTA Risk & Insurance Management Department, the Managing Engineer – Civil Inspections, will contact the LIRR Controllers regarding the receipt status of the Entry Permit Fee and an advance deposit for the anticipated services from the requestor.

Step 4 **Entry Permit Fee**

Upon confirmation from the LIRR Controllers Office that the **Entry Permit Fee of $3,000 and the Advance Deposit** have been received from the requestor, the Managing Engineer – Civil Inspections will execute and forward a copy of the executed agreement to the requestor, and the requestor shall proceed to Step 5

Step 5: **LIRR Civil Design & Inspection**

Contact:
Mr. Paul Nebab
LIRR Civil Design & Inspection
Sr. Project Engineer
Long Island Railroad, Hillside Support Facility
93-59 183rd Street, Dept. 3143, Hollis, NY 11423

Tele: (718) 558-3235
Email: pgnebab@lirr.org

Provide:

1) A copy of the executed Entry Permit (signed by LIRR and requestor)
2) Original signed copies of Evidence of Insurance - submitted in the proper format
3) Items 1 through 6 from Step 2

Upon review of all documents and obtaining appropriate confirmation from MTARIM that all insurances have been reviewed and approved, and that the Entry Permit agreement has been fully executed, a Field Inspector will be assigned to coordinate activities associated with the project, such as arranging for appropriate flag protection, RWP Training and request for mark-out of LIRR assets.

*** It should be noted that the requestor must not alter the documents or take exception to the LIRR Entry Permit Terms and Conditions. Failure to follow the Guidelines described herein may result in the cancellation of the Entry Permit Agreement.**

Long Island Rail Road

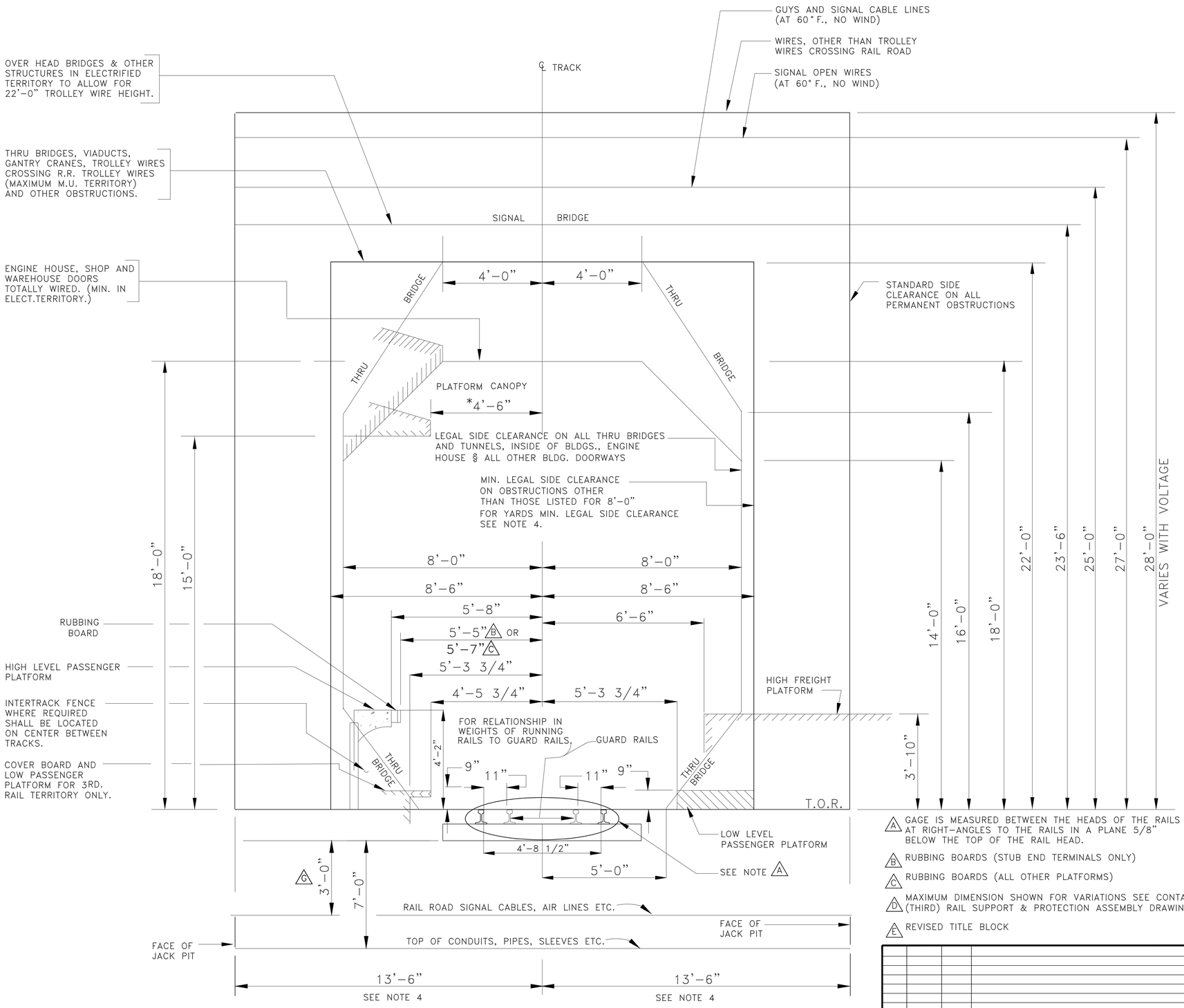
GENERAL REQUIREMENTS FOR PROJECTS ADJACENT TO LIRR PROPERTY WITH POTENTIAL TO IMPACT LIRR SAFETY AND OPERATIONS

- Attached are "General Requirements for Outside Contractors Working on LIRR Property". These requirements apply to this project. Entry Permit requires an outside agency or contractor to reimburse the LIRR for all project costs (i.e. Flag Protection, Project engineers, Inspectors, etc.)
- Shop drawings and calculations detailing sheeting must be submitted prior to excavation, which may impact the stability of adjacent embankment supporting our tracks. Shop drawings and calculations to include the original seal and signature of a NYS Licensed Professional Engineer. Sheeting to be designed for Cooper E-80 Axel Loading as per the American Railway Engineering Associates.
- Fouling of LIRR Track includes work within 15 ft. of or along LIRR tracks. This also includes operation of equipment or any part of equipment (i.e. crane booms) which could fall onto or within six (6) feet of LIRR tracks.
- All parties are notified that fouling LIRR track without LIRR flag protection being present is a violation of Federal Law.
- <u>CRANES</u>
    - Crane operation must maintain at least fifteen (15) feet vertical and horizontal separation from overhead LIRR High Tension Lines. If overhead power lines from outside agencies are supported from LIRR High tension poles, a letter from that agency must be submitted to the LIRR stating their vertical and horizontal separation requirements.
    - The following conditions apply for operating cranes with booms of sufficient length to fall onto or within six (6) feet of LIRR tracks.
        - Crane information must be submitted to the LIRR for review, including proposed location of crane, proposed boom angle and loading diagram indicating that the crane is capable of supporting 150% of load to be lifted. Loading diagram to include original seal and signature of NYS Licensed Professional engineer.
        - LIRR flag protection must be on site. Crane operations will generally be restricted to 10:00 am to 3:00 pm daily.
        - Crane operator or one (1) construction supervisor who will be on the site full time must be trained and verified in Roadway Worker Protection.
        - Crane operations must follow the direction of LIRR flagmen and face boom parallel to our track when ordered to do so.

Long Island Rail Road

GENERAL REQUIREMENTS FOR OUTSIDE CONTRACTORS WORKING ON LIRR PROPERTY

- Obtain Entry Permits. Call LIRR Manager – Engineering Compliance at 347-494-6487.
- Obtain required Railroad Protective Liability Insurance and submit original signed insurance documents to the MTA Risk and Insurance Management, call 646-252-1429.
- All contractor personnel whose duties include working on, within fifteen (15) feet of or above railroad tracks or operating equipment (i.e. cranes) on or near railroad tracks shall attend annual Roadway Worker Protection (RWP). Call LIRR Training Department at 718-558-3100 to schedule.
- Two (2) weeks prior to start of construction call Managing Engineer – Civil Inspection at 718-558-3218.



A GAGE IS MEASURED BETWEEN THE HEADS OF THE RAILS AT RIGHT–ANGLES TO THE RAILS IN A PLANE 5/8" BELOW THE TOP OF THE RAIL HEAD.

B RUBBING BOARDS (STUB END TERMINALS ONLY)

C RUBBING BOARDS (ALL OTHER PLATFORMS)

D MAXIMUM DIMENSION SHOWN FOR VARIATIONS SEE CONTACT (THIRD) RAIL SUPPORT & PROTECTION ASSEMBLY DRAWING.

E REVISED TITLE BLOCK

NOTES:

1. STRUCTURES MUST NOT BE LOCATED NEARER TO TRACK THAN THE MINIMUM CLEARANCE LIMITS PRESCRIBED BY THIS PLAN AND THESE DISTANCES SHOULD BE EXCEEDED WHERE POSSIBLE.

   MINIMUM CLEARANCES:

   FOR TANGENT TRACK SHALL BE SHOWN ON THIS PLAN.

   FOR CURVED TRACK ABOVE TOP OF RAIL } ARE THE SAME AS SHOWN FOR TANGENT TRACK MEASURED VERTICALLY FROM TOP OF HIGH RAIL. EXCEPT PASSENGER AND FREIGHT PLATFORMS. THE HEIGHT OF WHICH SHALL BE MEASURED FROM TOP OF NEAREST RAIL.

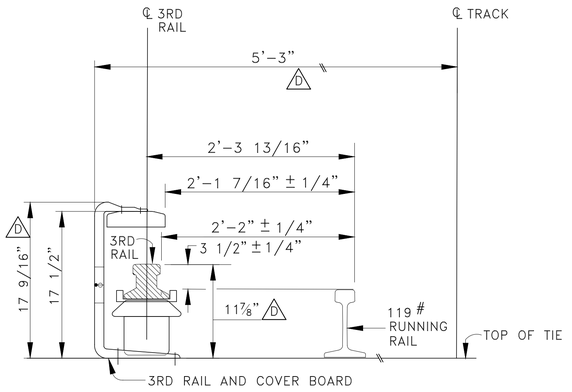
   SIDE CLEARANCE (MEASURED RADIALLY)
   - OUTSIDE: ON THE OUTSIDE OF CURVED TRACK. SIDE CLEARANCES SHALL BE MEASURED HORIZONTALLY FROM THE GAGE OF NEAREST RAIL AND BE INCREASED BY 1 INCH PER DEGREE OF CURVATURE; OVER THAT SHOWN FOR TANGENT TRACK.
   - INSIDE: ON THE INSIDE OF CURVED TRACK SIDE CLEARANCES SHALL BE MEASURED HORIZONTALLY FROM THE GAGE OF NEAREST RAIL AND BE INCREASED BY 1 INCH PER DEGREE OF CURVATURE, OVER THAT SHOWN FOR TANGENT TRACK TO WHICH MUST ALSO BE ADDED TO THE AMOUNT OF SUPER ELEVATION OF THE HIGH RAIL ABOVE THE LOW RAIL.

2. PLATFORM CANOPY CLEARANCE OF 4'–6" MAY BE USED ONLY IF RESTRICTIONS AGAINST RIDING ON THE SIDE OR TOP OF CARS AT THE LOCATION OF THE CANOPY ARE LISTED IN THE CURRENT TIME–TABLE UNDER SPECIAL INSTRUCTIONS.
3. CLEARANCE REQUIREMENTS SET FORTH ON THIS PLAN SHALL
4. MINIMUM YARD CLEARANCE REQUIREMENTS SHALL BE AS SPECIFIED ON MESOP 14.9.F OPERATING PROCEDURE

F APPLY FOR TRACK MAINTENANCE ONLY
(FOR NEW CONSTRUCTION SEE LATEST LIRR MW2000)
STRUCTURES AND TRACKS CONSTRUCTED PRIOR TO APRIL 1st. 1961. MAY BE MAINTAINED AND EXTENDED AT THE EXISTING CLEARANCE.
THE FOLLOWING SIDE CLEARANCE ARE INCLUDED IN SECTION 51–A OF THE RAIL ROAD LAW EFFECTIVE APRIL 1st. 1961.

MIN. C TO C DISTANCE FOR PARALLEL MAIN TRACKS	– 13'–6" C TO C
C TO C DISTANCE YARD AND SIDE TRACKS	– 13'–6" C TO C
ALL TRACKS PARALLEL TO MAIN OR PASSING TRACKS	– 15'–0" C TO C
LADDER TRACKS TO ADJACENT TRACKS	– 18'–0" C TO C
PARALLEL LADDER TRACKS	– 19'–0" C TO C
PARALLEL TEAM TRACKS AND HOUSE TRACKS	– 13'–6" C TO C

G CLEARANCE IS MEASURED FROM THE BOTTOM OF TIE



REFERENCES:
THIS DRAWING IS A REDRAFTING OF DWG. NO. 820–10. DATED: 6–30–72

Rev. No	Drawn by	Chk by	Description	Date
B	MS	LA	REVISED WIRES CLEARANCE NOTE 4	7/9/19
B	MS	LA	REVISED RR SIGNAL CABLES, AIR LINES ETC. CLEARANCE G	5/2/19
7	TRACK DEPT	EG	REVISED NEW TRACK CLEARANCE F	8/17/18
6	BCF	RS/PH	REVISED TITLE BLOCK E	1-26-10
5	LA	HN/PH	REVISED 3RD RAIL DIMENSIONS D	12-18-08
5	ALV	HN/PH	REVISED PLATFORM CLEARANCE DIMENSION A	1-23-08
4	RC	HN	ADDED RUBBING BOARDS B,C	2-26-07
3	ALV	JS	REVISED DIMENSION AND DEFINED GAGE A	
2	ALV	MP/VAM	REDRAFTED IN AUTOCAD FORMAT	1-26-99

project:

LONG ISLAND RAIL ROAD

Metropolitan Transportation Authority — Structures Department

THE LONG ISLAND RAIL ROAD — Drawing Approved by the Chief Engineer — Jamaica, N.Y. 11435

drawing title:

MINIMUM RAILWAY CLEARANCES

A

P.E.	designed by: SEE NOTE	drawn by: ALV	drawing no: 820-10
	checked by: VAM/MP	scale: NONE	sheet no: CE-1
	in charge: FJS	date: 1-26-99	
	branch: STANDARD		

Metropolitan Transportation Authority

GUIDELINES FOR SUBMISSION OF INSURANCE

1. **INSURANCE REQUIREMENTS:**
   Refer to your contract for required insurance coverages, limits, and endorsements and review with your authorized insurance broker for compliance

2. **ACCEPTABLE FORMS OF INSURANCE:**
   - ACORD 25: Certificate of Insurance
   - ACORD 855: NY Construction Certificate of Liability Addendum
   - ACORD 28: Certificate of Commercial Property Insurance
   - ACORD Binder or Insurance Policy
   - Workers' Compensation*:*
     - C-105.2 – Certificate of Workers' Compensation Insurance; or
     - U-26.3 – Certificate of Workers' Compensation from the State Insurance Fund; or
     - GSI-105/SI-12 – Certificate of Workers' Compensation Self Insurance; or
     - CE-200 – Attestation of Exemption when Contractor meets the requirements (e.g.) Sole Proprietor

3. **CERTIFICATE OF INSURANCE MUST INCLUDE:**
   - Policy coverage details (e.g.) policy term, per occurrence/per project; limits/sub-limits, aggregate limits, deductibles, self-insured retentions, and insurance carrier name and corresponding NAIC #
   - Contract Identifier (e.g.) Contract #, Request for Proposal #, or Entry Permit #
   - Location and Description of Work
   - Reference indemnified parties as additional insureds, primary and noncontributory coverage, and waiver of subrogation in favor of the MTA Agency
   - Certificate Holder must list the MTA Agency
   - Certificate of Insurance must be signed by an authorized insurance representative

4. **INSURANCE BINDER MUST INCLUDE:**
   [Applicable for Railroad Protective Liability (RRPL) and Builder's Risk/Installation Floater (BR)]
   - Policy coverages and details (e.g.) policy term, limits/sub-limits, aggregate limits, deductibles, self-insured retentions, insurance carrier name and applicable NAIC #
   - Contract Number or Entry Permit Number; Designated Contractor; Location and Description of Work
   - Reference Indemnified parties as Named Insureds (RRPL) or Additional Named Insureds (BR)
   - Binder must be issued and signed by the authorized insurance company or their authorized insurance agent
   - Policy must be submitted within 30 days from binder effective date.

5. **SUBMISSION OF INSURANCE:**
   [Initial evidence of all required insurance must be sent to the MTA Agency/Procurement Representative]
   - ACORD Certificate of Insurance
   - Additional Insured Endorsements (e.g.) CG 20 10/CG 20 26/CG 20 38 and CG 20 37
   - Primary and Non-Contributory Endorsements
   - Environmental Endorsements (e.g.) MCS 90 and CA 99 48, and Non-Owned Disposal Site (NODS), when applicable
   - Insurance Policy - A Binder may be accepted pending issuance of the policy.
   - Joint Venture:
     - General Liability Insurance must be procured in the name of the Joint Venture; or
     - General Liability Insurance may be endorsed to add the Joint Venture as Additional Named Insured

6. **INSURANCE COMPLIANCE:**
   - **Initial Insurance:** A "compliant message" will be sent to the Contractor via the MTA Certificate of Insurance Management System (CIMS), the Complianz™.
   - **Renewal Insurance:** Each contract will have a "designated" email address for submission of renewal insurance.